Bathtub - Symetrics
Deck valve counter-clockwise closing hot or cold - polished chrome
Article number: 20 000 980-00

- 1-1/4" hole diameter
- Flange 2-3/8" x 2-3/8"

polished chrome

Dimensional drawing

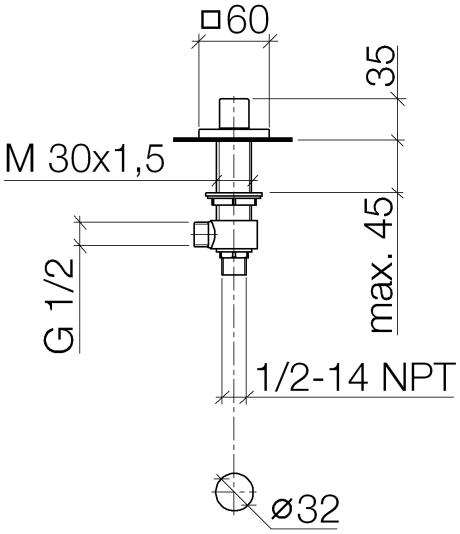

All dimensions in mm / inch = mm x 0,0394

Bathtub - Symetrics
Deck valve counter-clockwise closing hot or cold - polished chrome
Article number: 20 000 980-00

Flow rate chart

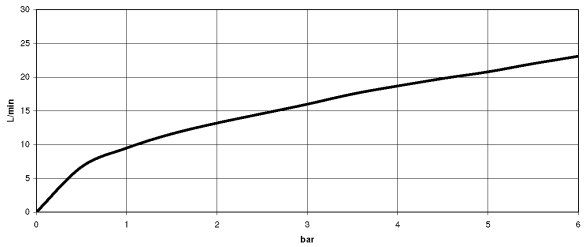

Bathtub - Symetrics
Deck valve counter-clockwise closing hot or cold - polished chrome
Article number: 20 000 980-00

Other surface finishes

platinum matte

20 000 980-06

More custom finish options are available via special production (xTra Service). Please see our finish matrix for availability and pricing or contact a Dornbracht representative.

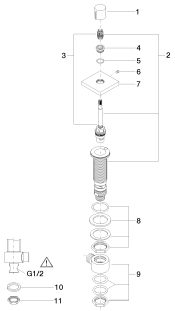

Spare parts list

Number	Item Number	Designation	Number of units